REV	DESCRIPTION	BY	CHK	DATE	ECN / MPS
A	ENGINEERING RELEASE	MKS	MKS	07/09/08	M72767B
B	(IC)WAS M12 X 2.5-6H	MKS	MKS	4/10/09	0016471

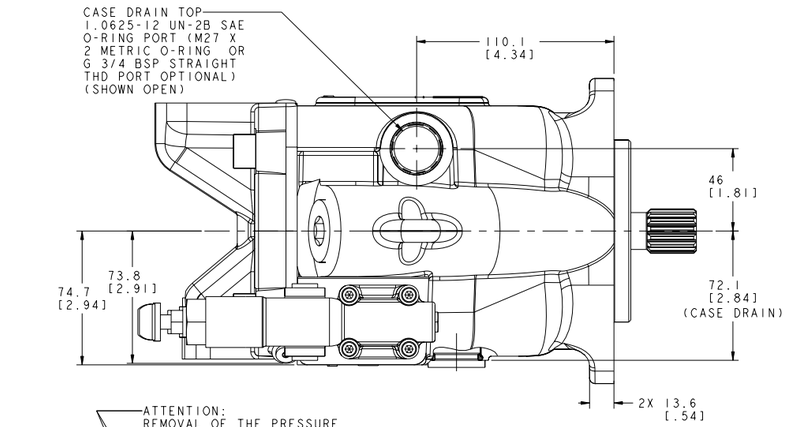

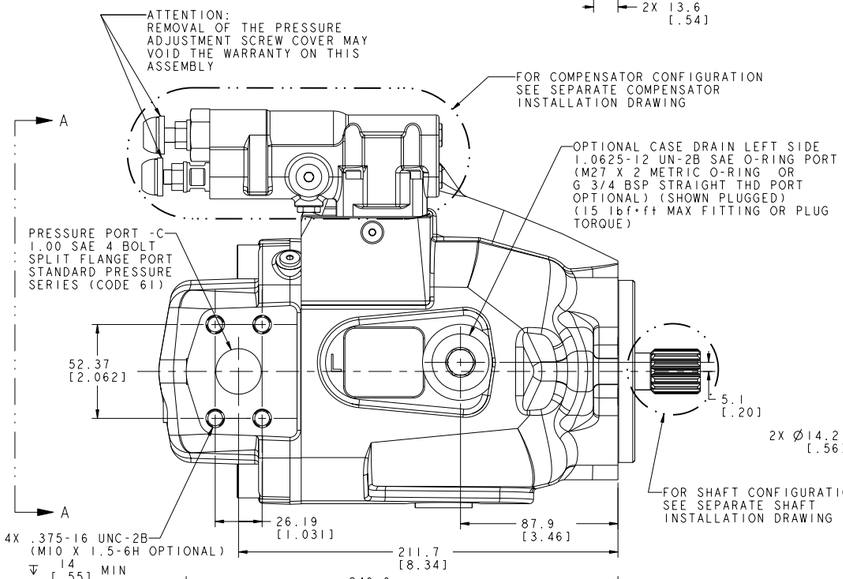

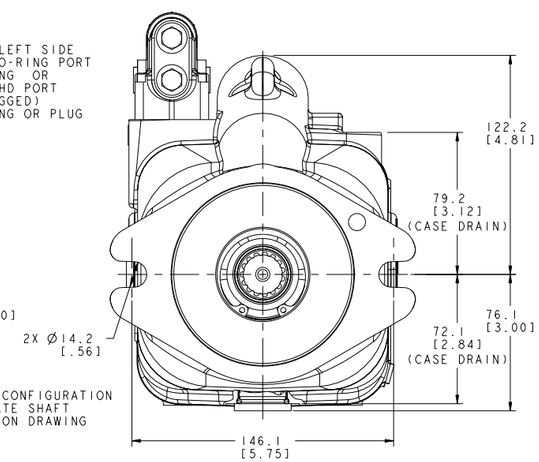

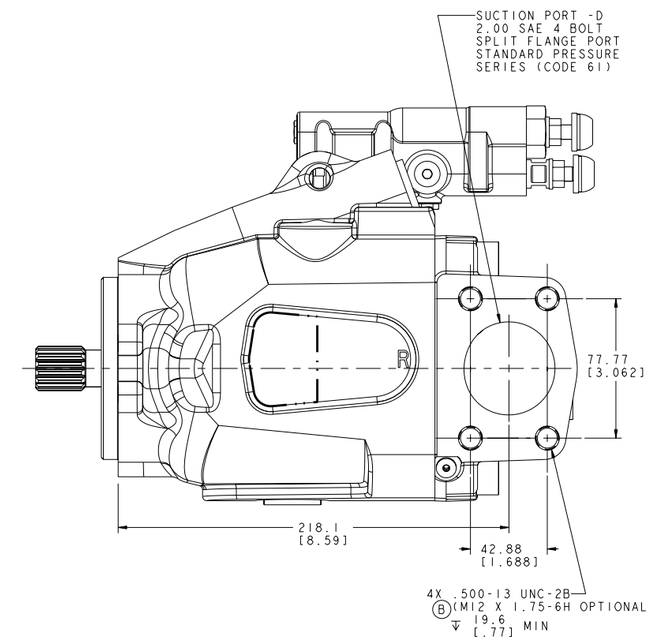

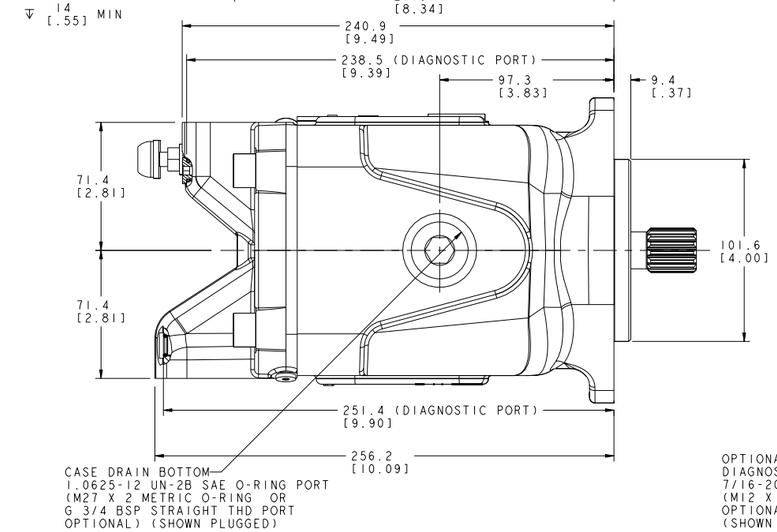

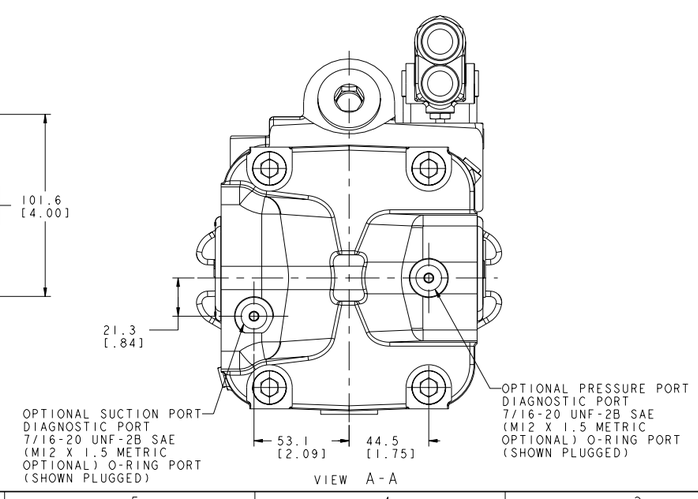

NOTE

1 UNIT MUST BE INSTALLED IN SUCH A POSITION THAT THE CASE DRAIN ASSURES AN OIL LEVEL AT OR ABOVE UNIT CENTERLINE BEFORE STARTING

REVIEWED FOR CLASSIFICATION PER ESP-042

DISTRIBUTION CODE(S): -

UNLESS OTHERWISE SPECIFIED ALL DIMENSIONS ARE IN
INCHES
MILLIMETERS (INCHES)

TOLERANCES
.X ± ----
.XX ± REF
.XXX ± ONLY
∠ ± ----

UNSPECIFIED RADII ARE: ----

UNSPECIFIED DRAFT ANGLES ARE: ----

DRAWING BASED ON ANSI Y14.5M-1982

THE REPRODUCTION, DISTRIBUTION, AND UTILIZATION OF THIS DOCUMENT, AS WELL AS THE COMMUNICATION OF ITS CONTENTS TO OTHERS WITHOUT EXPLICIT AUTHORIZATION IS PROHIBITED. OFFENDERS WILL BE HELD LIABLE FOR THE PAYMENT OF DAMAGES. ALL RIGHTS RESERVED IN THE EVENT OF THE GRANT OF A PATENT, UTILITY MODEL, OR DESIGN. (PER ISO 16016)

Danfoss

DRAWN NWS BY/DATE 12-27-07
CHECKED BMS BY/DATE 12-27-07
ENGRG DJZ BY/DATE 12-27-07
METALLURGY ---- BY/DATE

MATERIAL/HEAT TREAT

TITLE
SERIES 420 PUMP INSTALLATION

THIRD ANGLE PROJECTION
DO NOT SCALE

MICROINCHES
MICROMETERS (MICROINCHES)
ARITHMETICAL AVERAGE

NUMBER
A-3215-004

SCALE 1/1
SHEET 1 OF 1