THE REPRODUCTION, DISTRIBUTION AND UTILIZATION OF THIS DOCUMENT, AS WELL AS THE COMMUNICATION OF ITS CONTENTS TO OTHERS WITHOUT EXPLICIT AUTHORIZATION IS PROHIBITED. OFFENDERS WILL BE HELD LIABLE FOR THE PAYMENT OF DAMAGES. ALL RIGHTS RESERVED IN THE EVENT OF THE GRANT OF A PATENT, UTILITY MODEL OR DESIGN. (PER ISO 16016)

REVISIONS			
REV	DESCRIPTION	DATE	APPROVED

FN

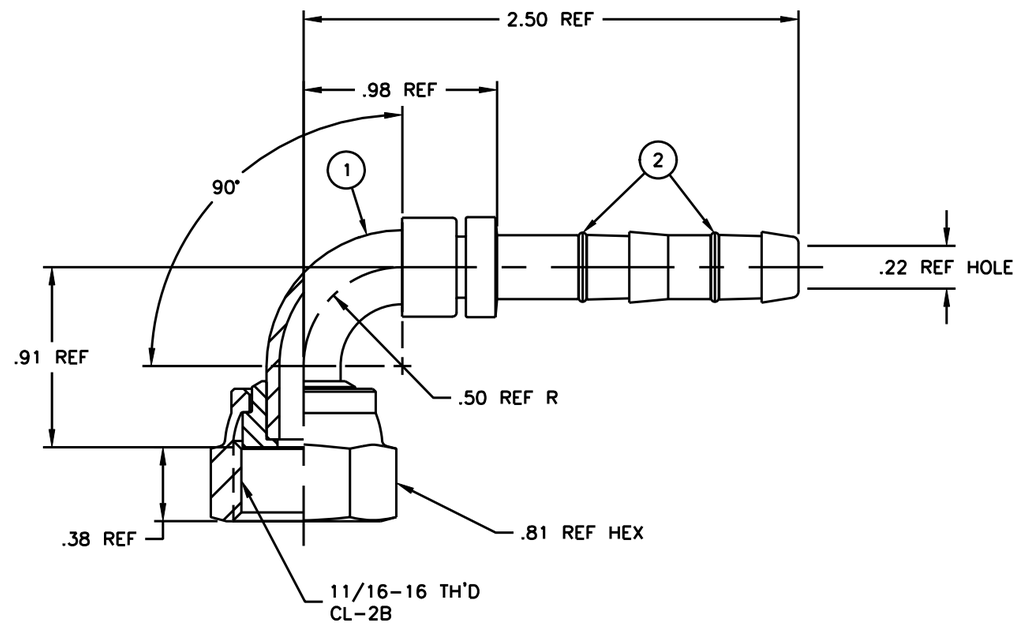

INCH

FJ5994-01-0606S	FJ4994-01-0606S	1F40106-06			
AEROQUIP PART NUMBER	1 NIPPLE ASSEMBLY	2 O'RING (2 REQUIRED)			

LIST OF MATERIALS

ITEM NO.	MATERIAL
1	STEEL
2	HNBR

DRAWN T. HARTFORD
CHECKED J. BAHNSEN
APPROVED J. GRAU
RELEASE DATE 1999-09-09
EN-F19222
DP-1256
THIRD ANGLE PROJECTION
ITEM TYPE: DTDA

Danfoss FLUID CONVEYANCE DIVISION

DRAWING TITLE
FITTING ASSEMBLY
90°, ORS FEMALE SWIVEL, SHORT DROP
GH134 HOSE

SIZE	DRAWING NUMBER	REV
A2	FJ5994-01-0606S	

SCALE 2/1 | DIST U | CAGE CODE 01276 | SHEET NO *

DWG.NO. FJ5994-01-0606S | SH. | REV.

1. PROCESS AS FOLLOWS:
   (a) LUBRICATE O'RINGS AND ASSEMBLE TO NIPPLE AS SHOWN.